# VTA,VTG Pump Curves

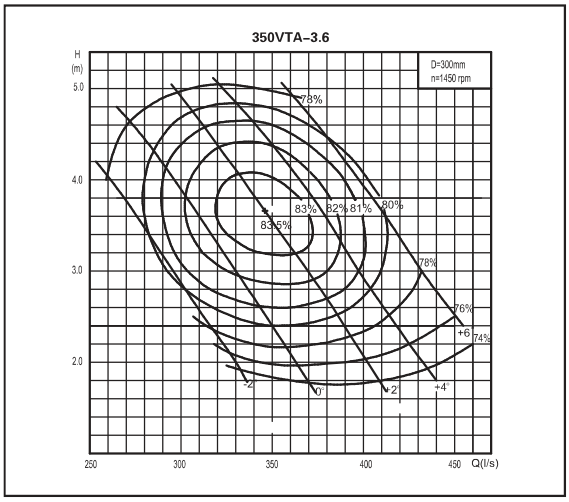


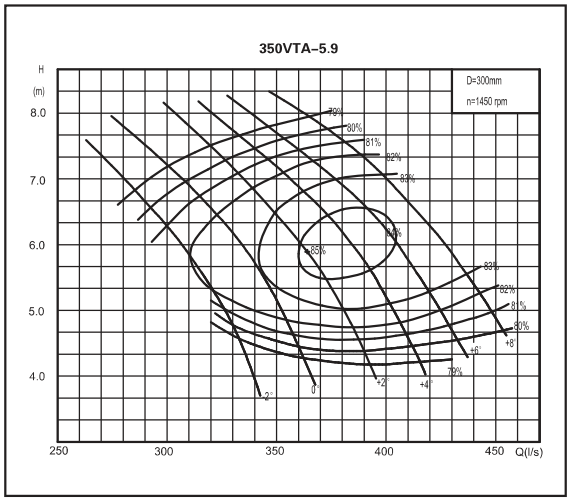


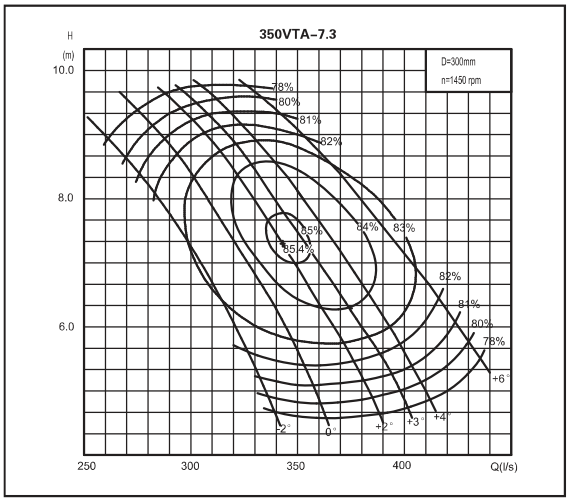


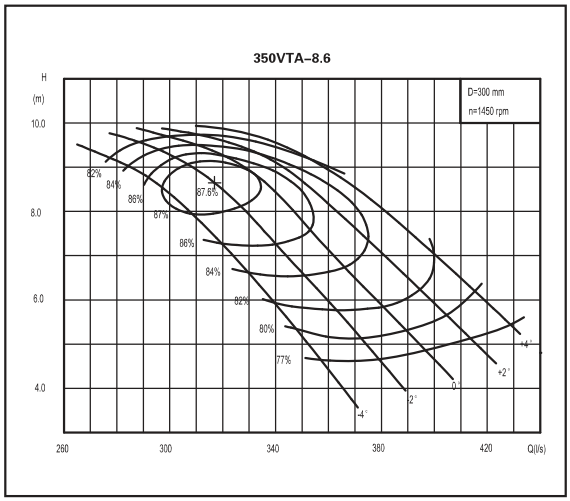


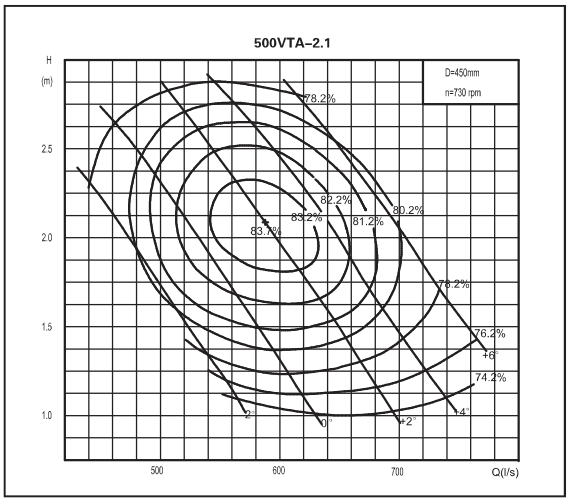


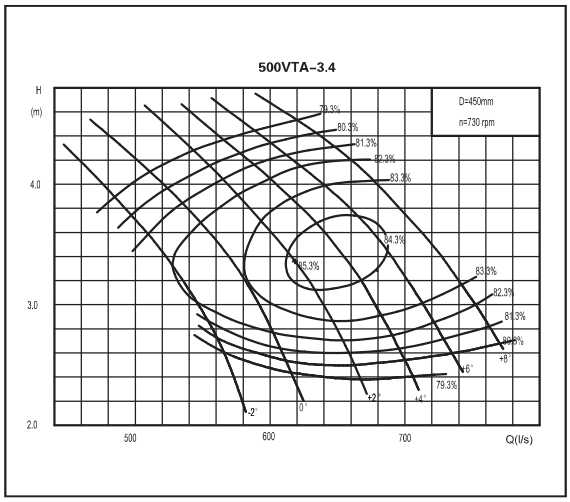

# VTA,VTG Pump Curves

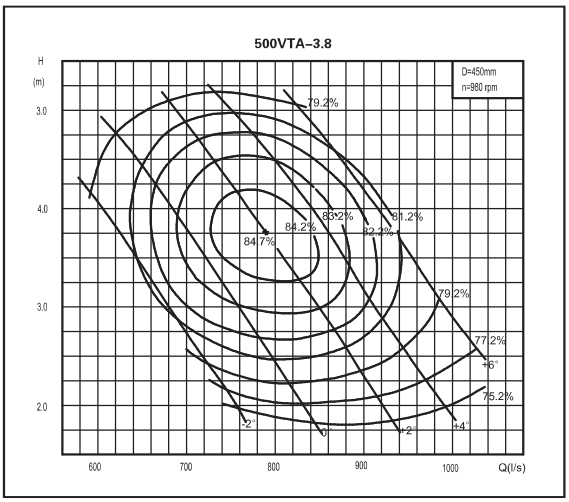


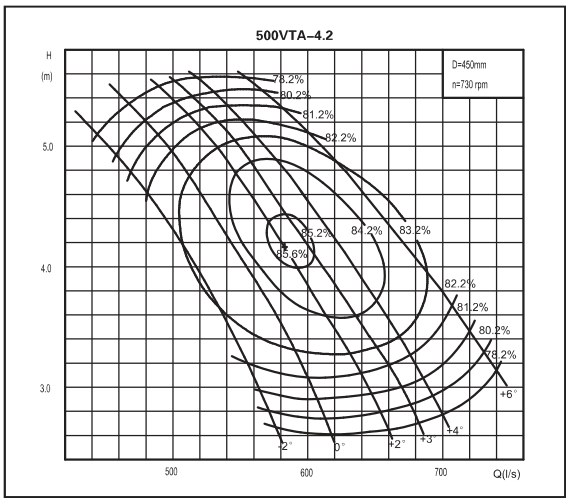


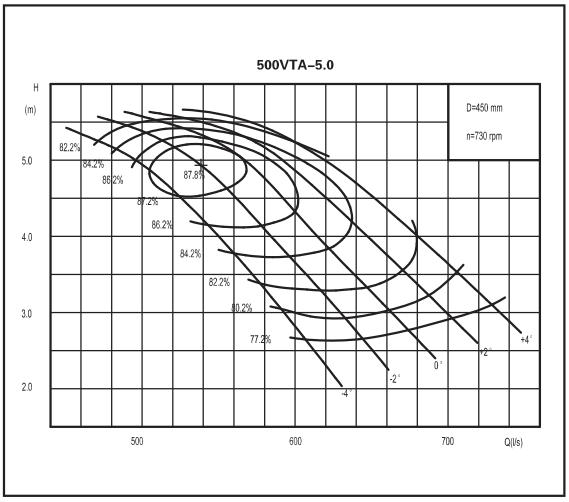


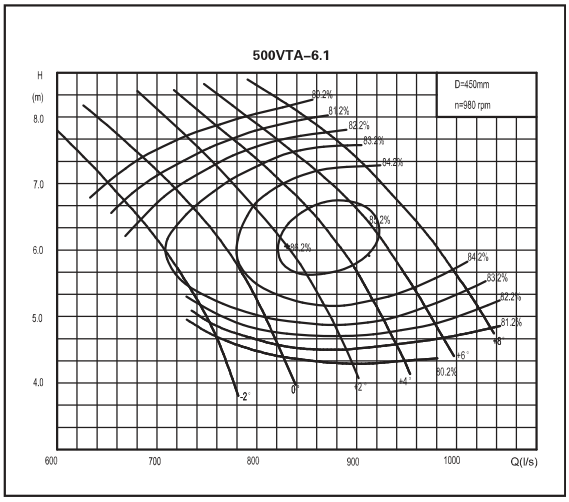


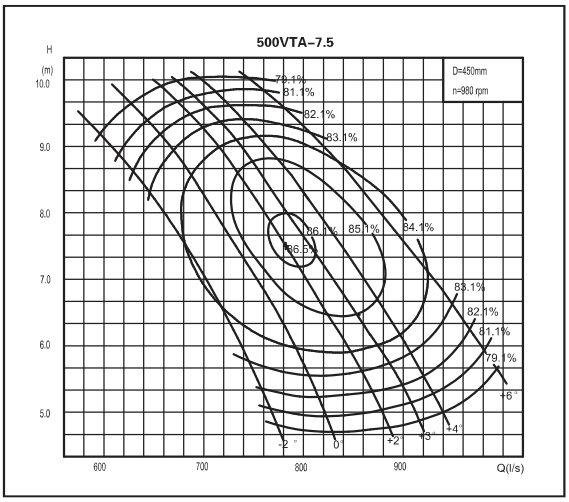


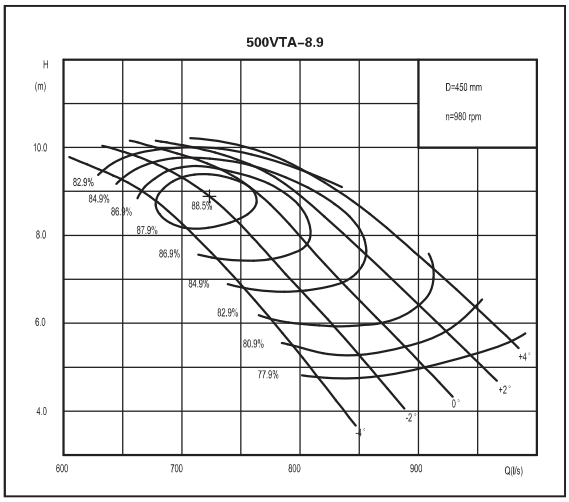

# VTA,VTG Pump Curves

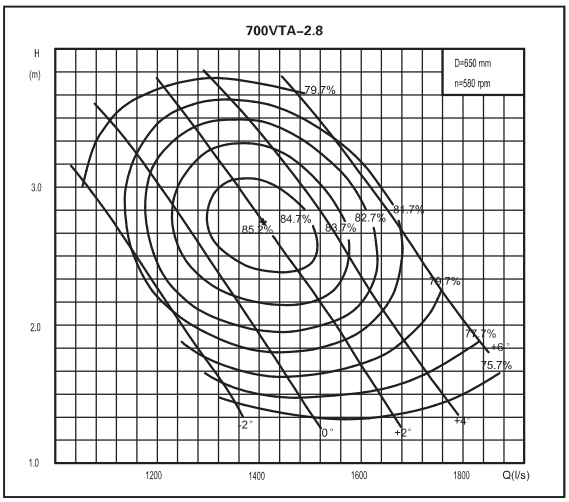


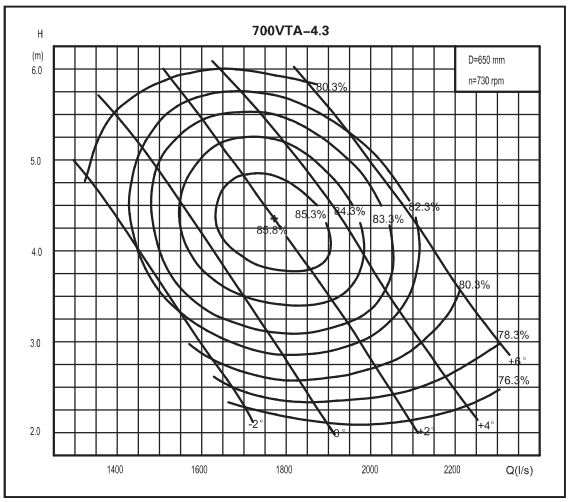


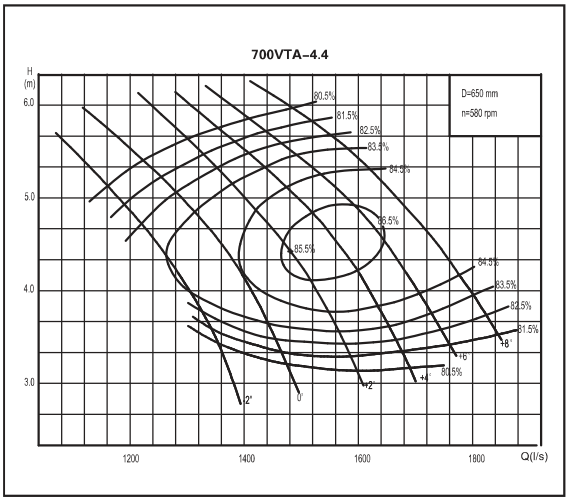


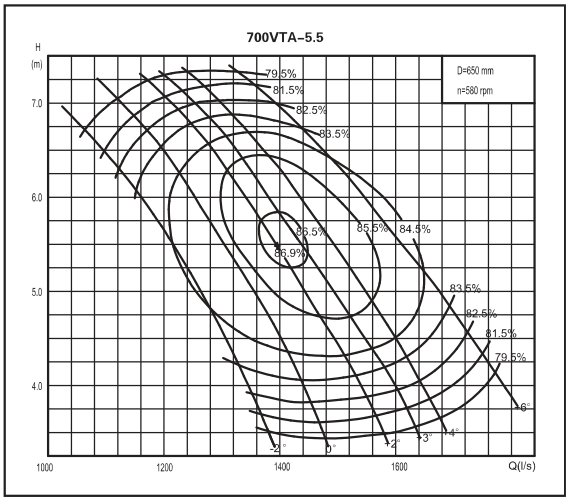


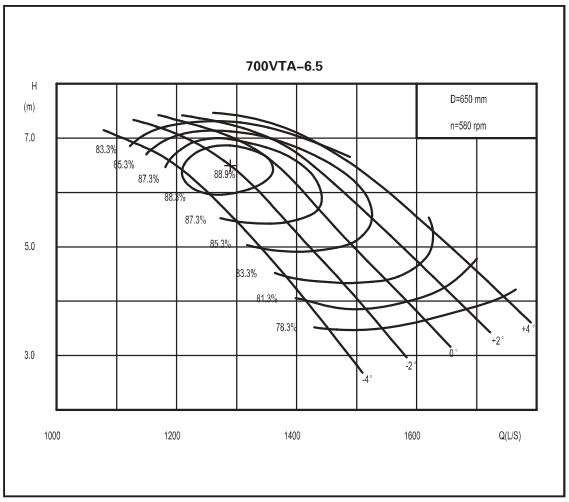


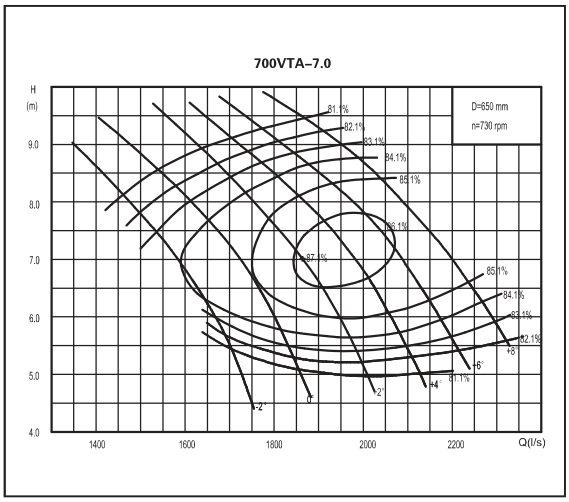

# VTA,VTG Pump Curves

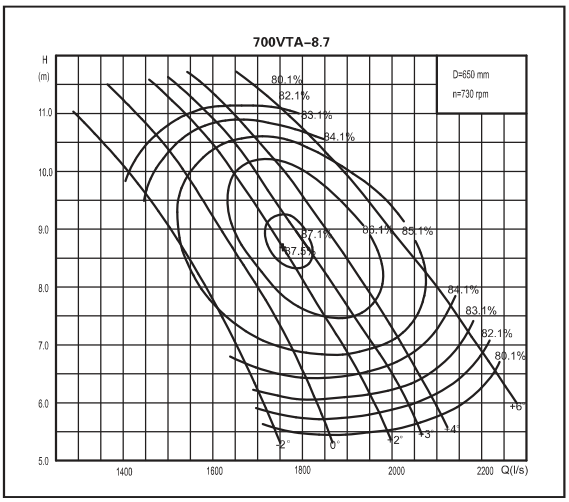


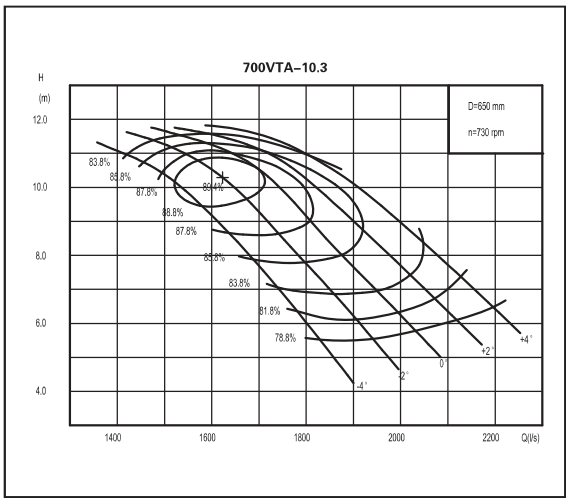


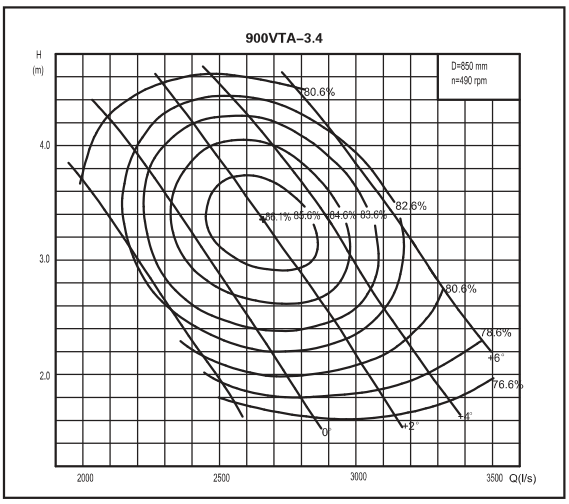


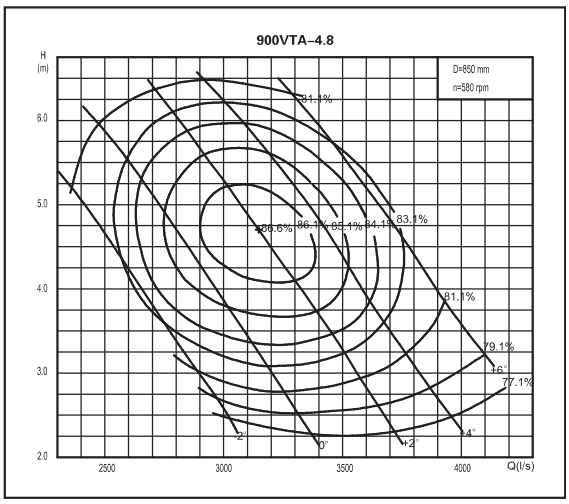


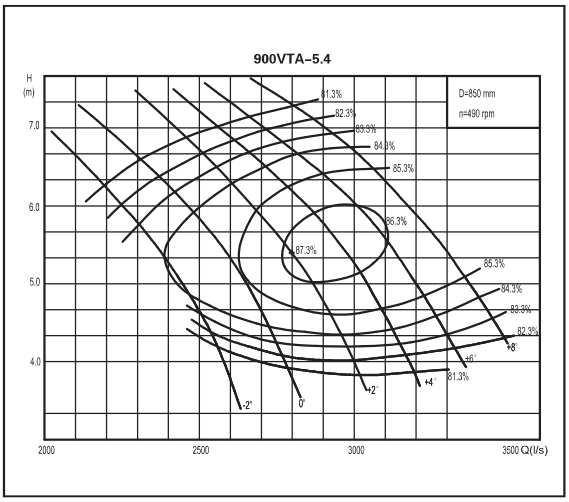


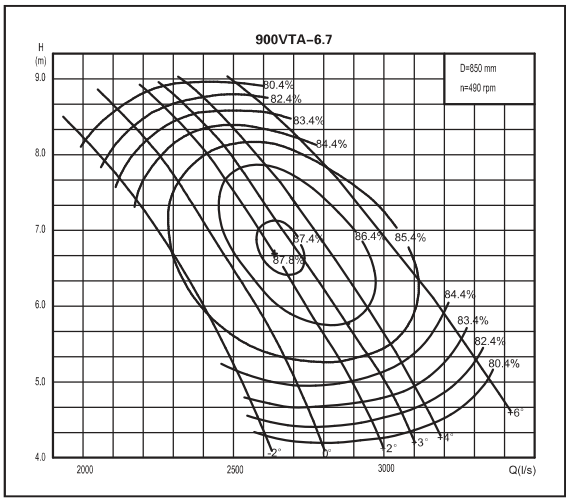

# VTA,VTG Pump Curves

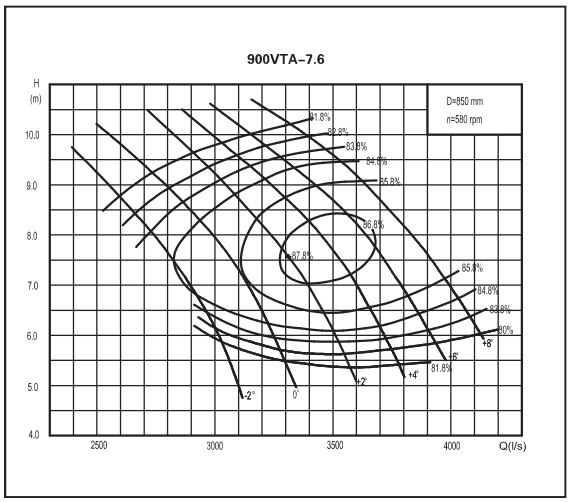


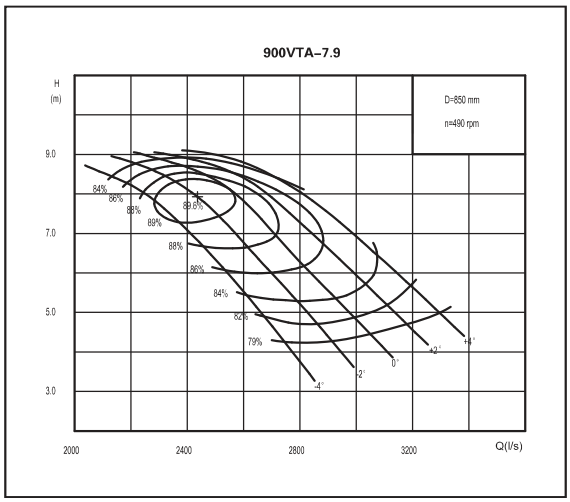


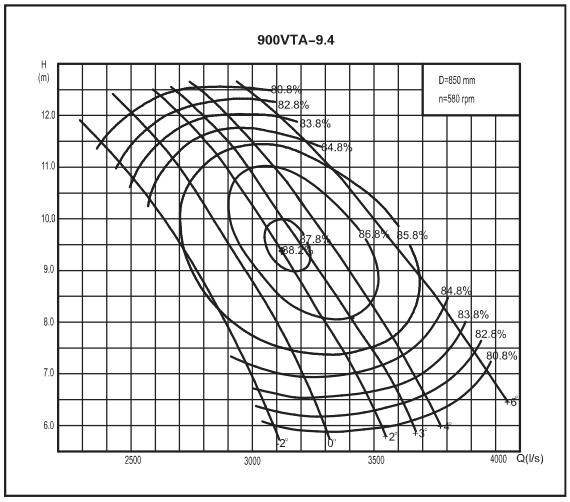


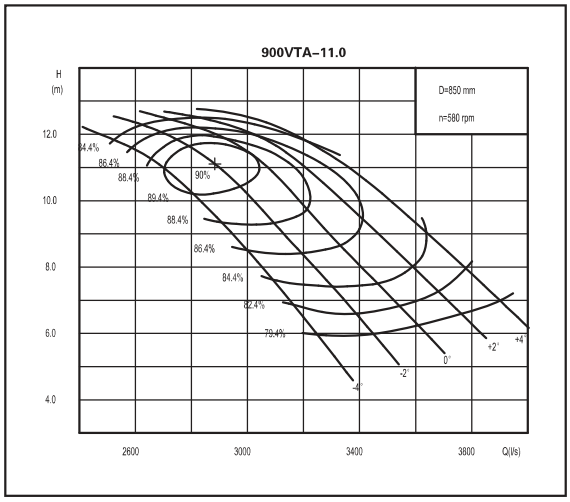


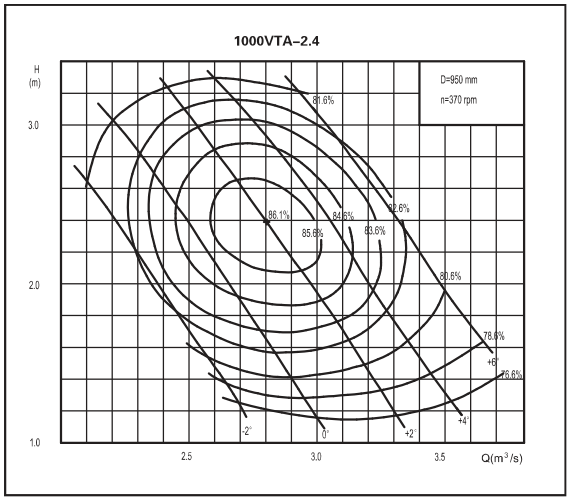


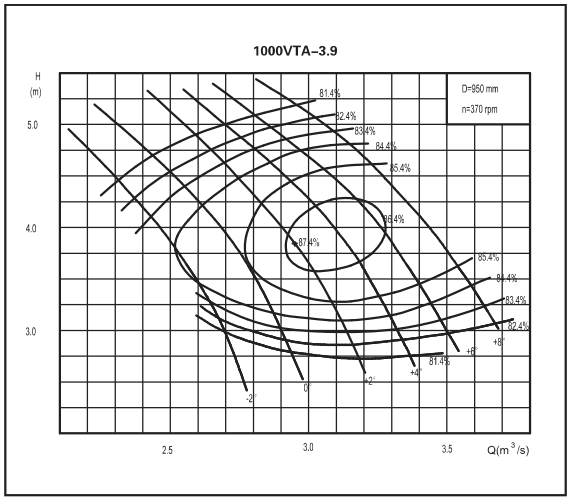

# VTA,VTG Pump Curves

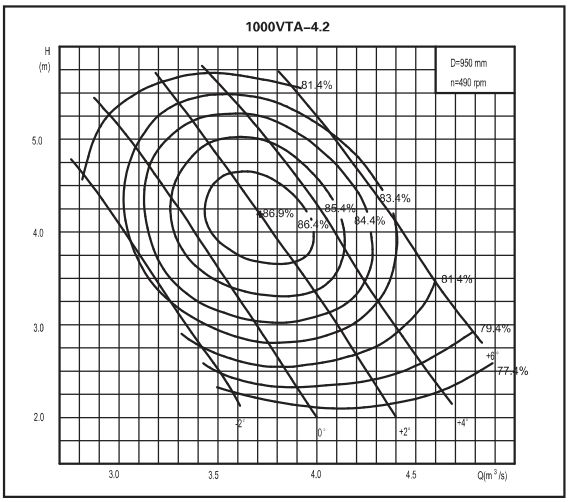


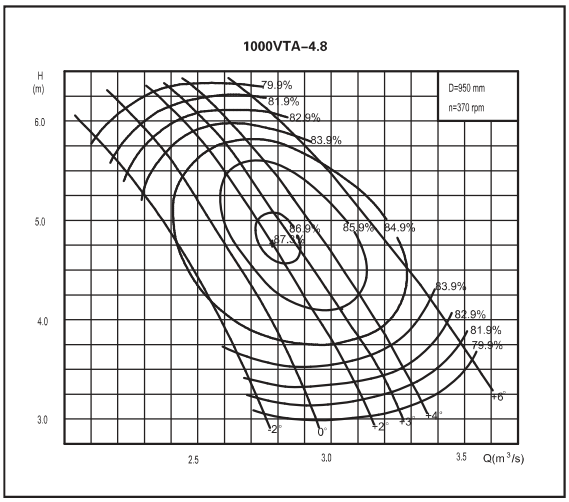


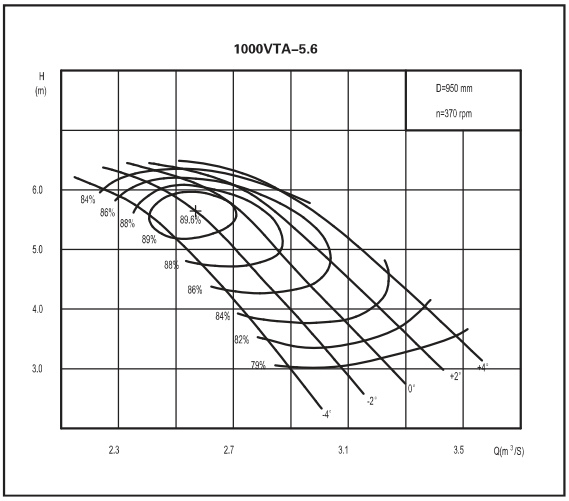


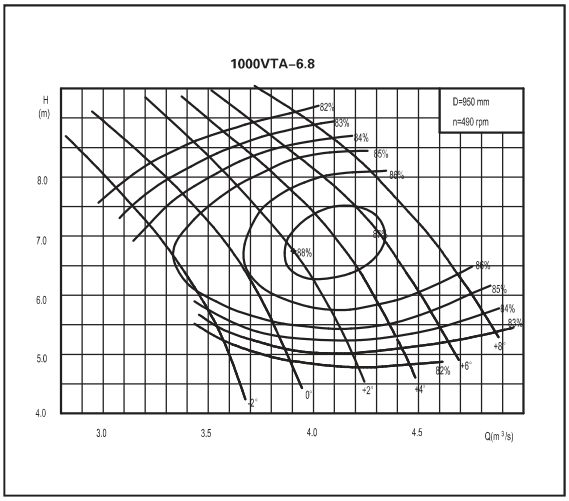


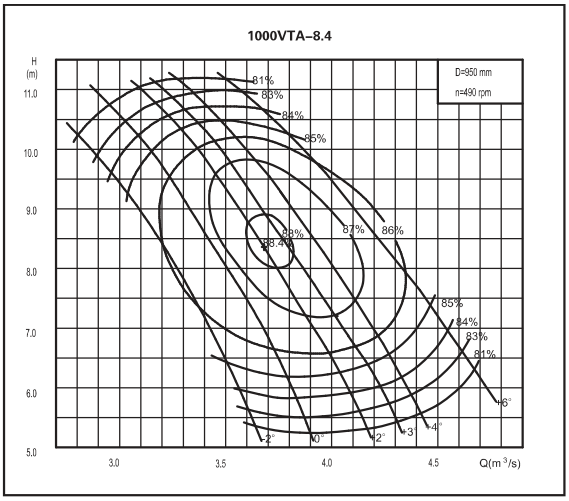


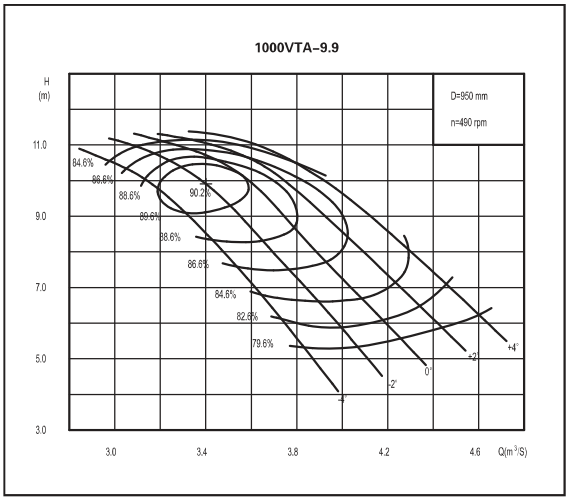

# VTA,VTG Pump Curves

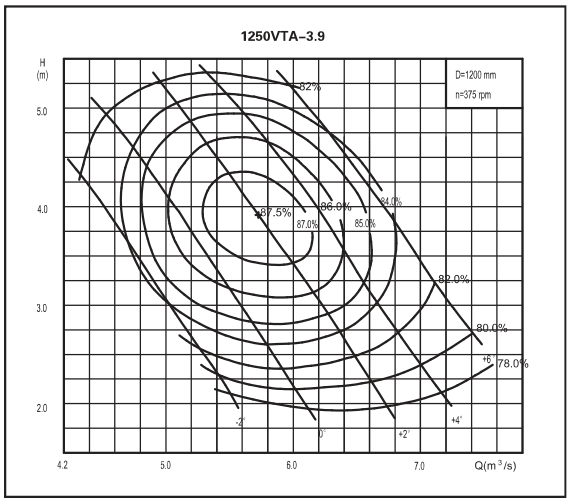


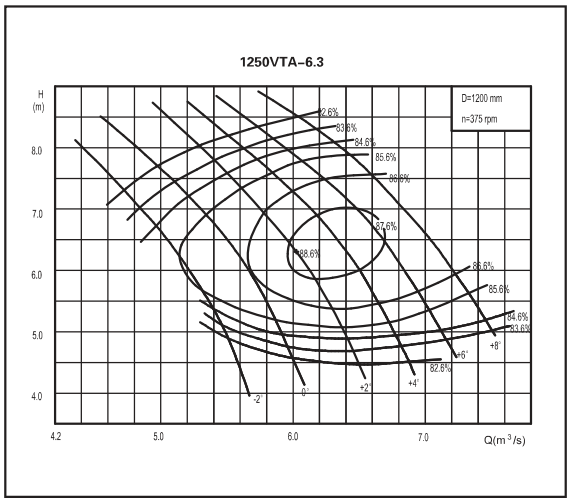


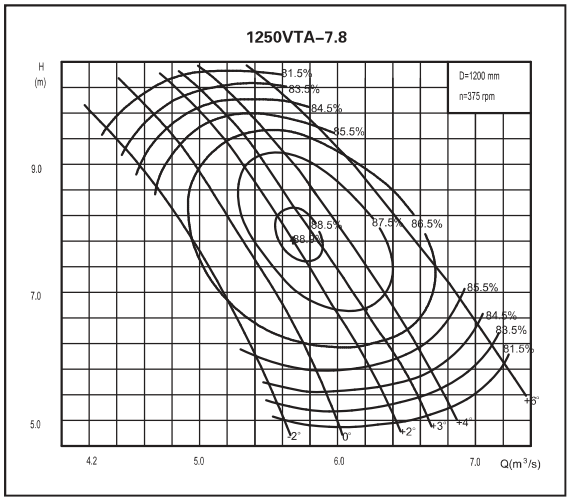


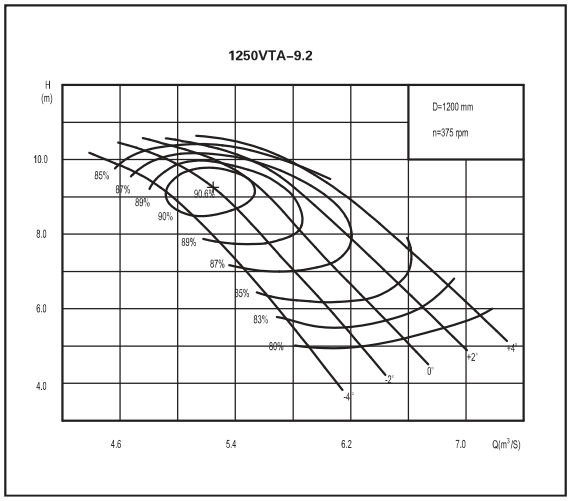


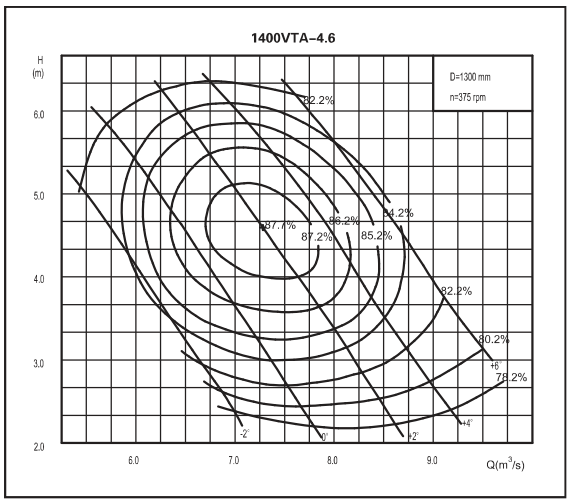


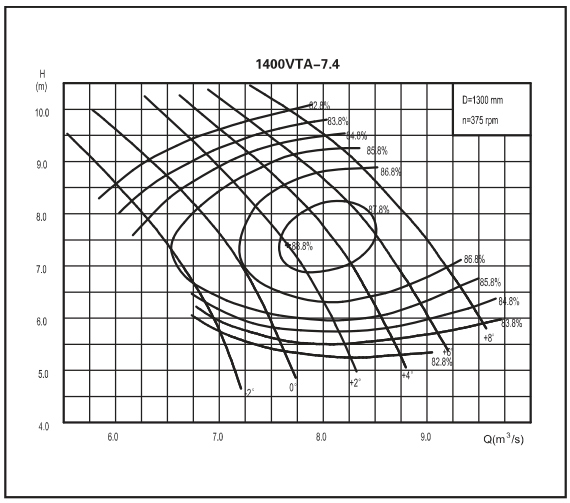

# VTA,VTG Pump Curves

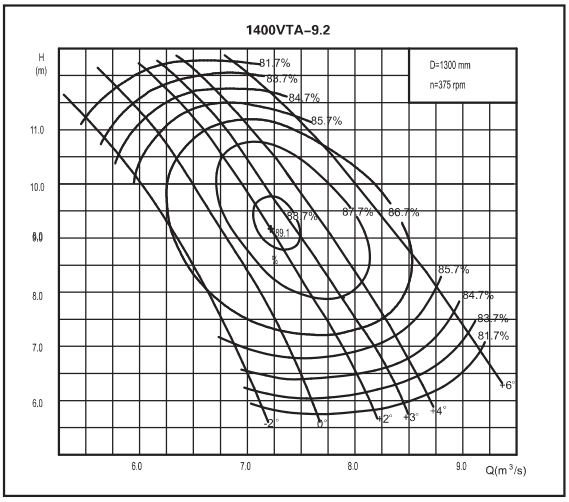


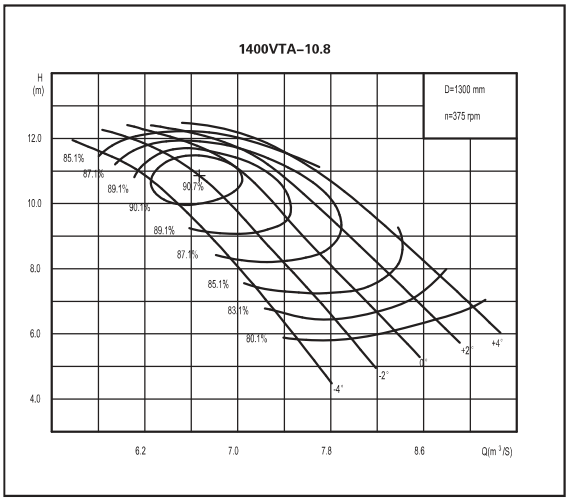


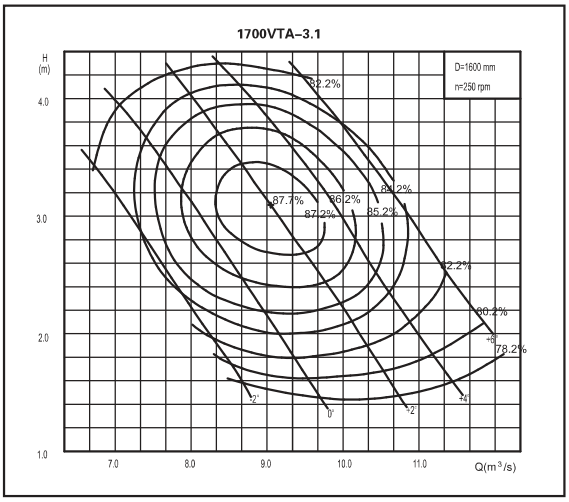


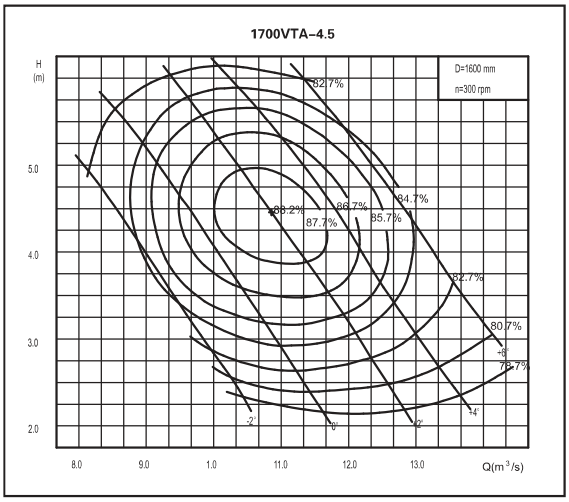


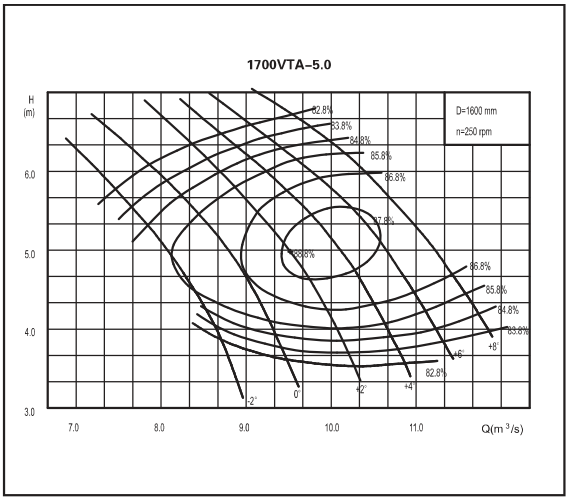


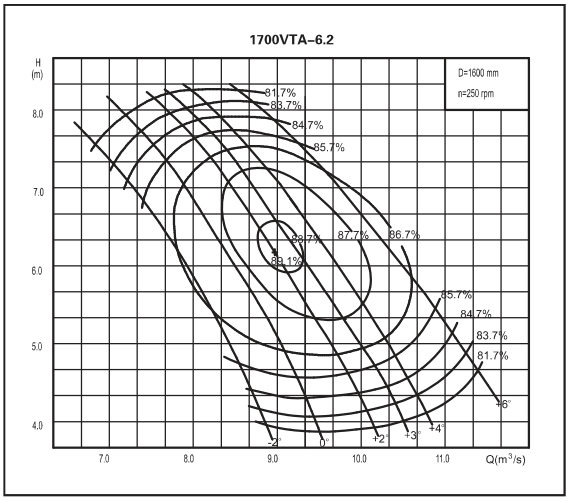
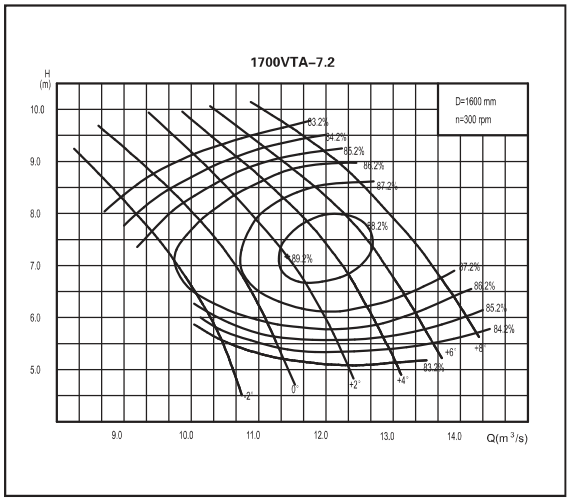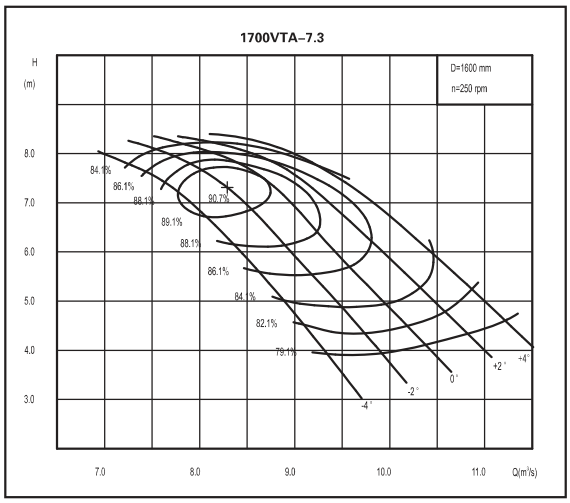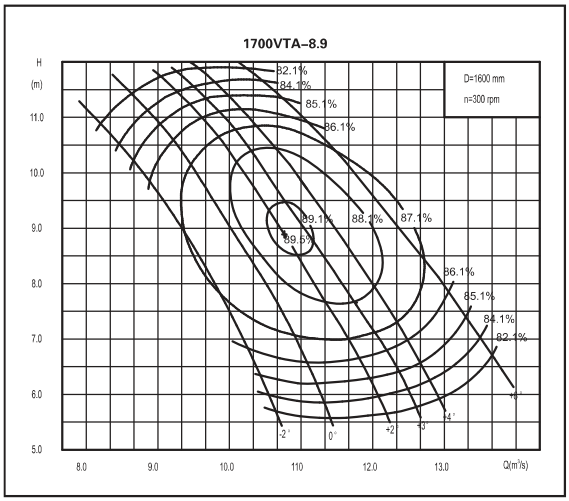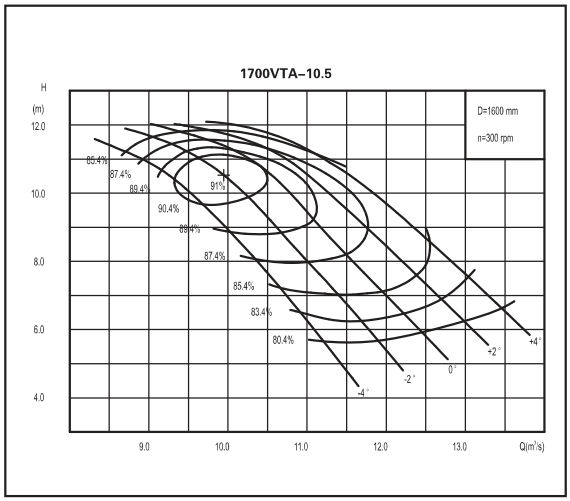
# VTA,VTG Pump Curves