Dimensions

Suction nozzle DN1: on top, discharge nozzle DN2: on top or suction nozzle DN1: at bottom, discharge nozzle DN2: at bottom[3)]

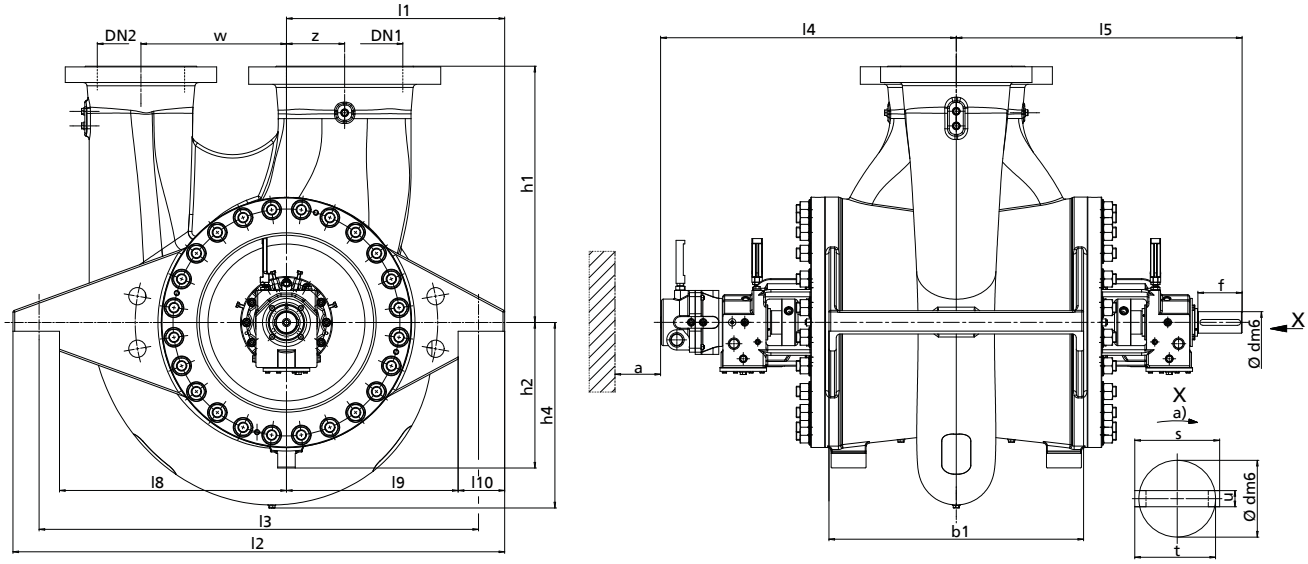

a)	Direction of rotation

Dimensions [mm]

Size	DN1	DN2	l1	l2	l3	l4	l5	l8	l9	l10	h1	h2	h4	w	z
200/430	300	200	575	1150	1050	765	709	475	475	100	475	315	360	275	250
300/520	400	300	770	1540	1420	889	835	640	640	130	700	420	435	366	300
300/600	400	300	630	1430	1290	983	938	660	490	140	816	485	576	425	225
300/670	400	300	920	1840	1630	881	850	735	735	185	800	530	610	360	290
300/680	400	300	750	1690	1510	1016	982	780	590	160	800	500	640	500	200
350/620	640[4)]	482[4)]	1020	1940	1760	1016	982	740	840	180	1800	500	610	460	440
400/710	500	400	1055	2110	1910	1037	990	870	870	185	800	570	715	410	360
500/800	640[4)]	476[4)]	840	1930	1760	1060	1065	920	670	170	1296	600	900	550	430

Dimensions [mm]

Size	DN1	DN2	a[5)]	b1	f	d	t	s	u	[6)]
200/430	300	200	955	434	125	48	51,5	-	14	1
300/520	400	300	1145	560	125	68	72,5	77	20	2
300/600	400	300	1360	780	113,5	74	78,5	83	20	2
300/670	400	300	1170	580	153	74	78,5	83	20	2
300/680	400	300	1445	875	150	74	78,5	83	20	2
350/620	640[4)]	482[4)]	1445	920	150	74	78,5	83	20	2
400/710	500	400	1410	780	170	84	89	94	22	2
500/800	640[4)]	476[4)]	1600	1020	175	108	114	120	28	2

3) Only if the pump foot geometry is symmetric
4) Weld end on request
5) Clearance required for removal of rotor (from the shaft end)
6) Number of keys

Suction nozzle DN1: on top, discharge nozzle DN2: at bottom or suction nozzle DN1: at bottom, discharge nozzle DN2: on top[7)]

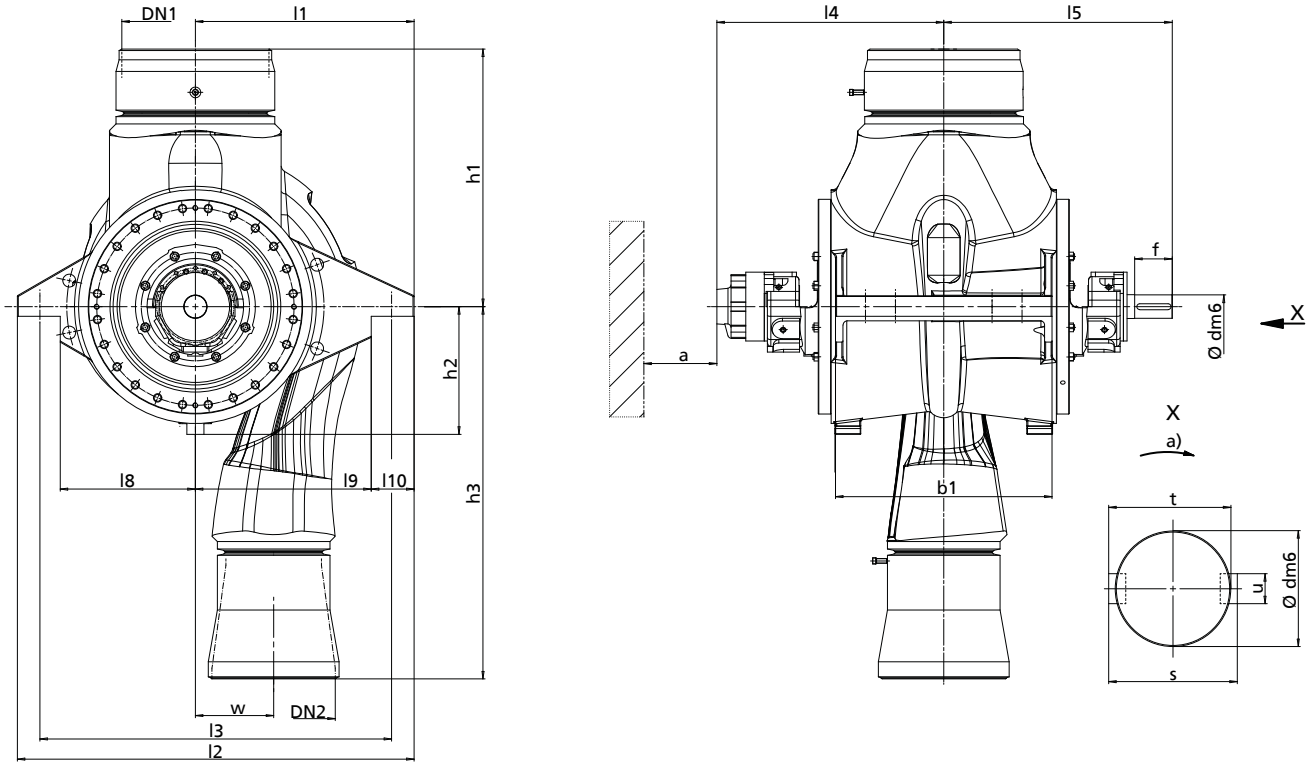

a)	Direction of rotation

Dimensions [mm]

Size	DN1	DN2	l1	l2	l3	l4	l5	l8	l9	l10	h1	h2	h3	w	z
300/670	350	350	920	1840	1630	881	850	735	735	185	850	962	960	-	-
300/670	441[8)]	382[8)]	920	1840	1630	881	850	735	735	185	1180	-	1370	-	-
300/670	350	300	850	1580	1440	881	850	540	660	190	850	-	800	-	-
300/670	392[8)]	392[8)]	920	1840	1630	870	850	735	735	185	1180	870	1470	-	-
300/670	441[8)]	381[8)]	920	1840	1630	870	850	735	735	185	1180	870	1370	-	-
400/710	450	450	1000	2000	1790	1037	990	815	815	185	1150	1150	1150	-	-
400/710	486[8)]	479[8)]	1000	2000	1790	1037	990	815	815	185	1350	1020	1520	-	-
500/800	686[8)]	575[8)]	1020	1850	1640	1055	1065	630	820	200	1200	595	1735	365	-

Dimensions [mm]

Size	DN1	DN2	a[9)]	b1	f	d	t	s	u	[10)]
300/670	350	350	1170	580	153	74	78,5	83	20	2
300/670	441[8)]	382[8)]	1170	580	153	74	78,5	83	20	2
300/670	350	300	1170	580	153	74	78,5	83	20	2
300/670	392[8)]	392[8)]	1170	745	154	95	100	105	25	2
300/670	441[8)]	381[8)]	1170	745	154	95	100	105	25	2
400/710	450	450	1410	780	170	84	89	94	22	2
400/710	486[8)]	479[8)]	1410	780	170	84	89	94	22	2
500/800	686[8)]	575[8)]	1600	1010	175	108	114	120	28	2

7) Only if the pump foot geometry is symmetric
8) Weld end on request
9) Clearance required for removal of rotor (from the shaft end)
10) Number of keys